- wire brush or wire wool
- Steel screws with plugs for fixing to a blockwork or concrete inner leaf.
- Steel tek screws for fixing to a steel framing system inner leaf

Figure 1 METZ NC-CT Roll

Figure 2 METZ Corner Units (internal)

Figure 3 METZ Corner Units (external including integral stop end)

Figure 4 METZ Stop End

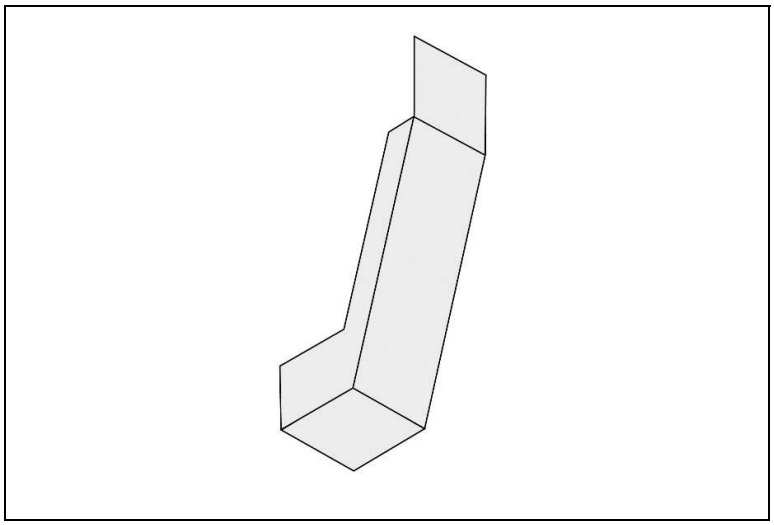

Figure 5 Steel supporting tool

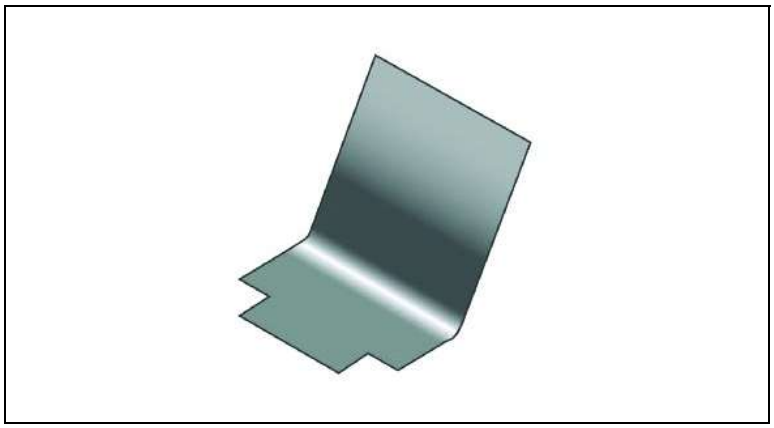

2 Manufacture

2.1 The product is factory formed from soft zinc. Corner units and special shapes are made to order and soldered in the factory to ensure that they are watertight.

2.2 As part of the assessment and ongoing surveillance of product quality, the BBA has:

- agreed with the manufacturer the quality control procedures and product testing to be undertaken
- assessed and agreed the quality control operated over batches of incoming materials
- monitored the production process and verified that it is in accordance with the documented process
- evaluated the process for management of nonconformities
- checked that equipment has been properly tested and calibrated
- undertaken to carry out the above measures on a regular basis through a surveillance process, to verify that the specifications and quality control operated by the manufacturer are being maintained.

3 Delivery and site handling

3.1 The product, along with boxed ancillary items, are delivered to site shrink-wrapped on pallets. Address labels and delivery notes are attached along with envelopes containing customer drawings.

3.2 To prevent damage or surface contamination, the pallets should be unloaded by forklift truck and the products stored in a secure place in the original packaging until required for use.

Assessment and Technical Investigations

The following is a summary of the assessment and technical investigations carried out on METZ NC-CT.

Design Considerations

4 Use

4.1 METZ NC-CT and the associated ancillary items, when specified and installed in accordance with this Certificate and generally with the specifications in PD 6697 : 2019, BS EN 1996-1-2 : 2005, BS EN 1996-2 : 2006, BS EN 1996-3 : 2006 and BS 8215 : 1991, are satisfactory for use as cavity trays in external cavity walls with a brick outer leaf and either a steel framing system (SFS) or a concrete/blockwork inner leaf.

4.2 The external leaf of the cavity walls should be built from standard brickwork with a minimum thickness of 102.5 mm.

5 Practicability of installation

The product is designed to be installed by a competent general builder or bricklayer experienced with these types of products.

6 Behaviour in relation to fire

The product has a reaction to fire classification of A1 without the need for testing, as defined by Commission Decision 96/603/EC and its use is unrestricted by the documents supporting the national Building Regulations.

7 Behaviour under load

The product will not adversely affect the ability of a wall to sustain and transmit compressive loads. However, the presence of a dpc can reduce the shear and tensile (and therefore bending) strengths of a wall. Test walls(1) incorporating the products and tested to BS EN 1052-4 : 2000 gave a Characteristic Shear Strength of 0.083 Nmm^{-2}, and when tested to DD86-1 : 1983 gave a Characteristic Internal Angle of Friction of 31.81°. The effect of wind and other horizontal or upward forces should be considered at the design stage.

(1) The test walls in these tests used Sunset Red bricks with a tabulated compressive strength of 63 Nmm^{-2} and a 1:1:6 mortar with a compressive strength of 4.3 Nmm^{-2}.

8 Resistance to passage of water

The METZ NC-CT (and associated ancillaries), when sealed together, provide a continuous barrier against liquid water. Water is ejected through weepholes or evaporated from the outer skin.

9 Use with Cavity Wall Insulation

Zinc has no effect on, and is unaffected by, materials currently used as A1 fire-rated cavity wall insulants.

10 Maintenance

As the product is confined within the wall and wall cavity, and has suitable durability (see section 11), maintenance is not required. However, any damage occurring before enclosure must be repaired (see section 15).

11 Durability

Under normal service conditions, the product will remain effective for the life of the building in which it is installed.

12 Reuse and recyclability

The product comprises zinc which can be recycled.

Installation

13 General

13.1 METZ NC-CT must be installed in accordance with the Certificate holder's instructions, PD 6697 : 2019, BS EN 1996-1-1 : 2005, BS EN 1996-2 : 2005, BS EN 1996-3 : 2006, BS 8215 : 1991 and this Certificate.

13.2 The product may be installed at a minimum temperature of 5°C in any weather that permits bricklaying. All relevant surfaces must be clean and dry prior to installing the cavity tray units.

14 Procedure

14.1 METZ Cavity Tray is supplied in 10 m rolls. It is formed and laid in maximum 2000 mm lengths, using tin snips to cut to the required lengths. Appropriate safety gloves should be worn when handling and working.

14.2 Corners are installed and fitted before installing straight lengths.

14.3 METZ Stop Ends are placed in position at the termination of horizontal runs of the METZ-NC-CT.

14.4 The flat tray is laid 10 mm from the edge of the external brick leaf and angled between 10° and 80° to cross the cavity, then a 100 mm vertical upstand is formed to the top edge of tray. The correct shape is formed by using the metal former tool.

14.5 The tray is held in place 10 mm from front edge and the line where the top of the tray meeting the inner wall is marked. Care should be taken to ensure that the wall is dust free and dry before fixing the METZ Adhesive Tape along the marked line using a hard roller. The tray is placed into the correct position to check fitting, then the release strip is removed, and the top of the tray is firmly pressed into place on adhesive strip. Full adhesion is achieved in 20-30 mins.

14.6 All joints are overlapped by 100 mm and bonded using double sided METZ Adhesive Tape. A hand roller is used to ensure that the product has completely bonded. A steel supporting tool is slid under the tray to stabilise it and minimise flexing during bonding (see Figure 6).

14.7 All exposed edges on the joints and top of inner wall must be sealed with METZ Sealant (see Figure 7).

Figure 6 Trays sealed with METZ adhesive tape and supporting tool.

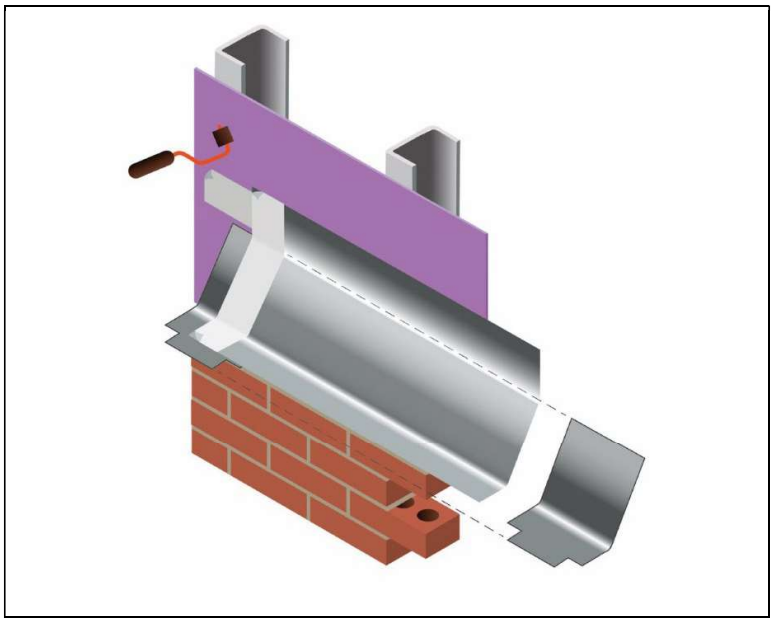

14.8 The tray is fixed to the inner wall using stainless-steel fixings at 450 mm centres along the lengths and above each joint, including all corner joints. Fixings should be centred on each overlap (see Figure 7). The Certificate holder can advise on suitable materials for a particular installation.

14.9 Steps 14.1 to 14.7 are repeated until the installation of the trays is completed.

Figure 7 trays' exposed edges sealed with METZ sealant

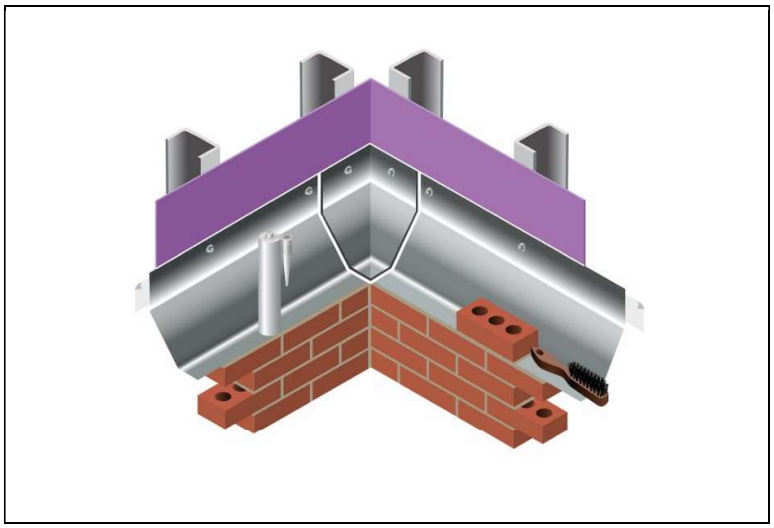

14.10 The surface of the tray which will come into contact with the mortar is scratched with a wire brush or wire wool to provide a key before bricklaying.

14.11 The tray is lifted slightly, and bedding mortar applied to the top layer of bricks. The cavity tray is laid on this mortar base and then construction continued in the usual way.

14.12 Non-combustible weeps are installed at a maximum spacing of 1 metre, unless the trays are to be used with lintels, in which case they are installed at maximum spacing of 450 mm (with the proviso of a minimum of two per lintel (see Figure 8).

Figure 8 External corner, Stop ends and weeps

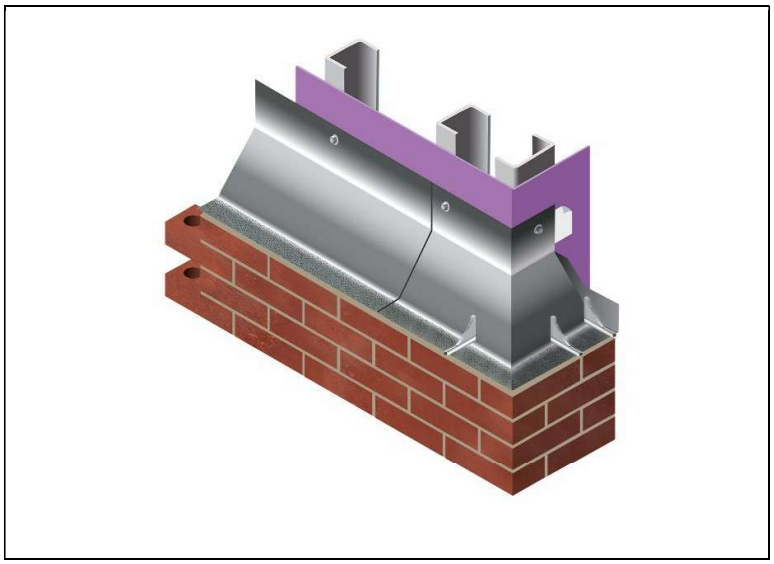

14.13 The product is compatible with 'L' type lintels (see Figure 9). A minimum required lintel projection beyond the face of the cavity closure/vertical dpc of 25 mm should be observed and stop ends should be placed to coincide with perpend joints. Further guidance can be found in the NHBC Standards, Chapter 6.1 (6.1.17) and Technical Guidance Note 6.1/29 S(see Figure 9).

Figure 9 Lintel detail

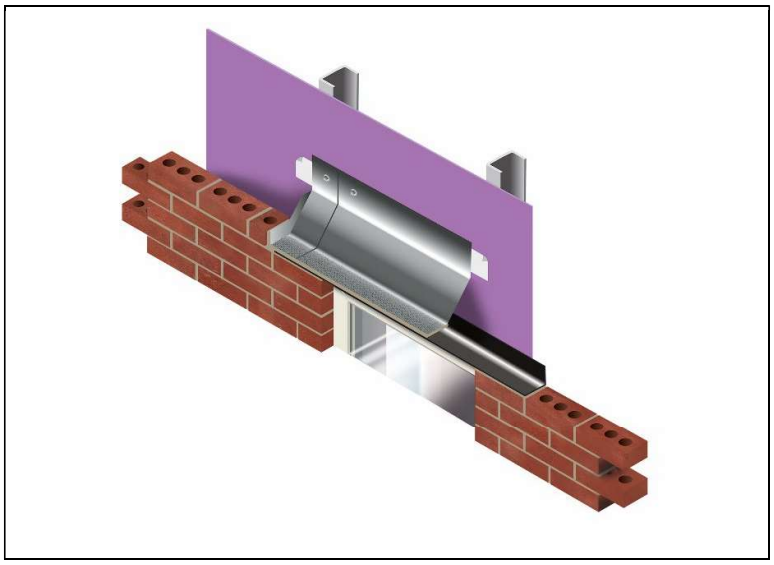

15 Repair

Any damaged trays should be replaced prior to the installation of masonry courses above the tray.

Technical Investigations

16 Tests

Tests were carried out and the results assessed to determine:

- Characteristic shear strength
- Characteristic flexural bond strength
- Overlap shear strength of cavity trays joints after accelerated ageing

- Leakage test carried out on a sample installation
- Fatigue cycling test.

17 Investigations

17.1 The manufacturing process was evaluated, including the methods adopted for quality control, and details were obtained of the quality and composition of the materials used.

17.2 A visit was carried out to a site-in-progress to assess the practicability of installation.

Bibliography

PD 6697 : 2019 *Recommendations for the design of masonry structures to BS EN 1996-1-1 and BS EN 1996-2*

BS EN 1996-1-1 : 2006 + A1 : 2012 *Eurocode 6 – Design of masonry structures – General rules for reinforced and unreinforced masonry structures*

BS EN 1996-1-2 : 2005 *Eurocode 6 – Design of masonry structures – General rules – Structural fire design*
BS EN 1996-2 : 2006 *Design of masonry structures – Design considerations, selection of materials and execution of masonry*
BS EN 1996-3 : 2006 *Eurocode 6 – Design of masonry structures – Simplified circulation methods for unreinforced masonry structures*

BS 8215 : 1991 *Code of practice for design and installation of damp-proof courses in masonry construction*

BS EN 1052-4 : 2000 *Methods of test for masonry – Determination of shear strength including damp proof course*

DD86-1 : 1983 *Damp-proof courses – Methods of test for flexural bond strength and short term shear strength*
DIN EN 1179 *Zinc and zinc alloys – Primary zinc*

18 Conditions

18.1 This Certificate:

- relates only to the product/system that is named and described on the front page
- is issued only to the company, firm, organisation or person named on the front page – no other company, firm, organisation or person may hold or claim that this Certificate has been issued to them
- is valid only within the UK
- has to be read, considered and used as a whole document – it may be misleading and will be incomplete to be selective
- is copyright of the BBA
- is subject to English Law.

18.2 Publications, documents, specifications, legislation, regulations, standards and the like referenced in this Certificate are those that were current and/or deemed relevant by the BBA at the date of issue or reissue of this Certificate.

18.3 This Certificate will remain valid for an unlimited period provided that the product/system and its manufacture and/or fabrication, including all related and relevant parts and processes thereof:

- are maintained at or above the levels which have been assessed and found to be satisfactory by the BBA
- continue to be checked as and when deemed appropriate by the BBA under arrangements that it will determine
- are reviewed by the BBA as and when it considers appropriate.

18.4 The BBA has used due skill, care and diligence in preparing this Certificate, but no warranty is provided.

18.5 In issuing this Certificate the BBA is not responsible and is excluded from any liability to any company, firm, organisation or person, for any matters arising directly or indirectly from:

- the presence or absence of any patent, intellectual property or similar rights subsisting in the product/system or any other product/system
- the right of the Certificate holder to manufacture, supply, install, maintain or market the product/system
- actual installations of the product/system, including their nature, design, methods, performance, workmanship and maintenance
- any works and constructions in which the product/system is installed, including their nature, design, methods, performance, workmanship and maintenance
- any loss or damage, including personal injury, howsoever caused by the product/system, including its manufacture, supply, installation, use, maintenance and removal
- any claims by the manufacturer relating to CE marking.

18.6 Any information relating to the manufacture, supply, installation, use, maintenance and removal of this product/system which is contained or referred to in this Certificate is the minimum required to be met when the product/system is manufactured, supplied, installed, used, maintained and removed. It does not purport in any way to restate the requirements of the Health and Safety at Work etc. Act 1974, or of any other statutory, common law or other duty which may exist at the date of issue or reissue of this Certificate; nor is conformity with such information to be taken as satisfying the requirements of the 1974 Act or of any statutory, common law or other duty of care.

British Board of Agrément
Bucknalls Lane
Watford
Herts WD25 9BA
tel: 01923 665300
clientservices@bbacerts.co.uk
www.bbacerts.co.uk
©2022